WORK POWER ENERGY

1. A small bob tied at one end of a thin string of length 1m is describing a vertical circle so that the maximum and minimum tension in the string are in the ratio 5 : 1. The velocity of the bob at the height position is _____ m/s.
(Take g = 10 m/s^2)

2. The potential energy (U) of a diatomic molecule is a function dependent on r (interatomic distance) as :

$$U = \frac{\alpha}{r^{10}} - \frac{\beta}{r^5} - 3$$

where, α and β are positive constants. The equilibrium distance between two atoms will be $\left(\frac{2\alpha}{\beta}\right)^{\frac{a}{b}}$, where a = ____.

3. A constant power delivering machine has towed a box, which was initially at rest, along a horizontal straight line. The distance moved by the box in time 't' is proportional to :-
(1) $t^{2/3}$ (2) $t^{3/2}$ (3) t (4) $t^{1/2}$

4. As shown in the figure, a particle of mass 10 kg is placed at a point A. When the particle is slightly displaced to its right, it starts moving and reaches the point B. The speed of the particle at B is x m/s. (Take g = 10 m/s^2)
The value of 'x' to the nearest integer is_____.

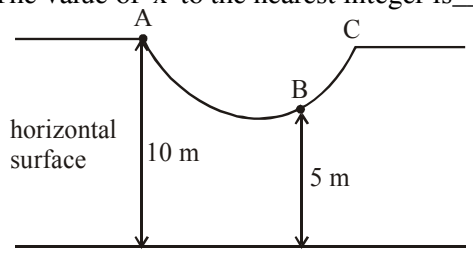

5. A ball of mass 4 kg, moving with a velocity of 10 ms^{-1}, collides with a spring of length 8 m and force constant 100 Nm^{-1}. The length of the compressed spring is x m. The value of x, to the nearest integer, is_____.

6. In a spring gun having spring constant 100 N/m a small ball 'B' of mass 100 g is put in its barrel (as shown in figure) by compressing the spring through 0.05 m. There should be a box placed at a distance 'd' on the ground so that the ball falls in it. If the ball leaves the gun horizontally at a height of 2 m above the ground. The value of d is ____ m. (g = 10 m/s^2)

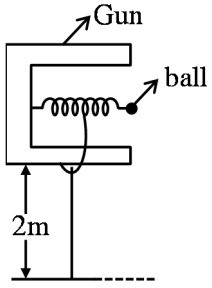

7. If the Kinetic energy of a moving body becomes four times its initial Kinetic energy, then the percentage change in its momentum will be :
(1) 100% (2) 200% (3) 300% (4) 400%

8. A body at rest is moved along a horizontal straight line by a machine delivering a constant power. The distance moved by the body in time *'t'* is proportional to :
(1) $t^{\frac{3}{2}}$ (2) $t^{\frac{1}{2}}$ (3) $t^{\frac{1}{4}}$ (4) $t^{\frac{3}{4}}$

9. A porter lifts a heavy suitcase of mass 80 kg and at the destination lowers it down by a distance of 80 cm with a constant velocity. Calculate the workdone by the porter in lowering the suitcase. (take g = 9.8 ms^{-2})
(1) –62720.0 J (2) –627.2 J
(3) +627.2 J (4) 784.0 J

10. A pendulum bob has a speed of 3 m/s at its lowest position. The pendulum is 50 cm long. The speed of bob, when the length makes an angle of 60° to the vertical will be (g = 10 m/s^2) _____ m/s.

node06\B0BA-BB\Kota\JEE MAIN\Jee Main-2021_Subject Topic PDF With Solution\Physics\English\ Work Power Energy

11. A force of $F = (5y + 20)\hat{j}$ N acts on a particle. The workdone by this force when the particle is moved from y = 0 m to y = 10 m is _____ J.

12. Given below is the plot of a potential energy function U(x) for a system, in which a particle is in one dimensional motion, while a conservative force F(x) acts on it. Suppose that E_{mech} = 8 J, the incorrect statement for this system is :

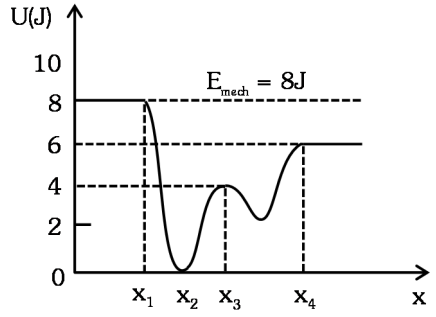

[where K.E. = kinetic energy]

(1) at $x > x_4$, K.E. is constant throughout the region.
(2) at $x < x_1$, K.E. is smallest and the particle is moving at the slowest speed.
(3) at $x = x_2$, K.E. is greatest and the particle is moving at the fastest speed.
(4) at $x = x_3$, K.E. = 4 J.

13. An automobile of mass 'm' accelerates starting from origin and initially at rest, while the engine supplies constant power P. The position is given as a function of time by :

(1) $\left(\frac{9P}{8m}\right)^{\frac{1}{2}} t^{\frac{3}{2}}$ (2) $\left(\frac{8P}{9m}\right)^{\frac{1}{2}} t^{\frac{2}{3}}$

(3) $\left(\frac{9m}{8P}\right)^{\frac{1}{2}} t^{\frac{3}{2}}$ (4) $\left(\frac{8P}{9m}\right)^{\frac{1}{2}} t^{\frac{3}{2}}$

14. A boy is rolling a 0.5 kg ball on the frictionless floor with the speed of 20 ms^{-1}. The ball gets deflected by an obstacle on the way. After deflection it moves with 5% of its initial kinetic energy. What is the speed of the ball now ?

(1) 19.0 ms^{-1} (2) 4.47 ms^{-1}
(3) 14.41 ms^{-1} (4) 1.00 ms^{-1}

15. A small block slides down from the top of hemisphere of radius R = 3 m as shown in the figure. The height 'h' at which the block will lose contact with the surface of the sphere is ____m. (Assume there is no friction between the block and the hemisphere)

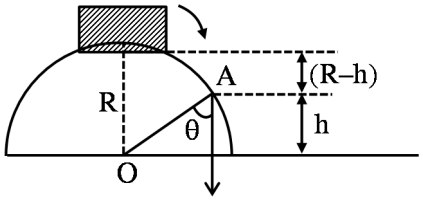

16. A uniform chain of length 3 meter and mass 3 kg overhangs a smooth table with 2 meter laying on the table. If k is the kinetic energy of the chain in joule as it completely slips off the table, then the value of k is ..... . (Take g = 10 m/s^2)

17. Two persons A and B perform same amount of work in moving a body through a certain distance d with application of forces acting at angle 45° and 60° with the direction of displacement respectively. The ratio of force applied by person A to the force applied by person B is $\frac{1}{\sqrt{x}}$. The value of x is ..... .

18. A body of mass 'm' dropped from a height 'h' reaches the ground with a speed of $0.8\sqrt{gh}$. The value of workdone by the air-friction is :

(1) –0.68 mgh (2) mgh
(3) 1.64 mgh (4) 0.64 mgh

19. An engine is attached to a wagon through a shock absorber of length 1.5 m. The system with a total mass of 40,000 kg is moving with a speed of 72 kmh^{-1} when the brakes are applied to bring it to rest. In the process of the system being brought to rest, the spring of the shock absorber gets compressed by 1.0 m. If 90% of energy of the wagon is lost due to friction, the spring constant is ..... $\times 10^5$ N/m.

node06\B0BA-BB\Kota\JEE MAIN\Jee Main-2021_Subject Topic PDF With Solution\Physics\English\ Work Power Energy

SOLUTION

1. Official Ans. by NTA (5)

Sol. Let the speed of bob at lowest position be v_1 and at the highest position be v_2.

Maximum tension is at lowest position and minimum tension is at the highest position.

Now, using, conservation of mechanical energy,

$$\frac{1}{2}mv_1^2 = \frac{1}{2}mv_2^2 + mg\,2l$$

$$\Rightarrow v_1^2 = v_2^2 + 4gl \quad ... (1)$$

Now $T_{max} - mg = \frac{mv_1^2}{l}$

$$\Rightarrow T_{max} = mg + \frac{mv_1^2}{l}$$

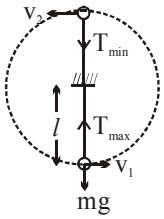

$$\& \quad T_{min} + mg = \frac{mv_2^2}{l}$$

$$\Rightarrow T_{min} = \frac{mv_2^2}{l} - mg$$

$$\frac{T_{max}}{T_{min}} = \frac{5}{1}$$

$$\Rightarrow \frac{mg + \frac{mv_1^2}{l}}{\frac{mv_2^2}{l} - mg} = \frac{5}{1}$$

$$\Rightarrow mg + \frac{mv_1^2}{l} = \left[\frac{mv_2^2}{l} - mg\right]5$$

$$\Rightarrow mg + \frac{m}{l}\left[v_2^2 + 4gl\right] = \frac{5mv_2^2}{l} - 5mg$$

$$\Rightarrow mg + \frac{mv_2^2}{l} + 4mg = \frac{5mv_2^2}{l} - 5mg$$

$$\Rightarrow 10mg = \frac{4mv_2^2}{l}$$

$$v_2^2 = \frac{10\times10\times1}{4}$$

$$\Rightarrow v_2^2 = 25 \Rightarrow v_2 = 5 \text{ m/s}$$

Thus, velocity of bob at highest position is 5 m/s.

2. Official Ans. by NTA (1)

Sol. For equilibrium

$$\frac{dU}{dr} = 0$$

$$\frac{-10\alpha}{r^{11}} + \frac{5\beta}{r^6} = 0$$

$$\frac{5\beta}{r^6} = \frac{10\alpha}{r^{11}}$$

$$r^5 = \frac{2\alpha}{\beta}; \quad r = \left(\frac{2\alpha}{\beta}\right)^{\frac{1}{5}}$$

$a = 1$

3. Official Ans. by NTA (2)

Sol. $P = C$

$FV = C$

$$M\frac{dV}{dt}V = C$$

$$\frac{V^2}{2} \propto t$$

$V \propto t^{1/2}$

$$\frac{dx}{dt} \propto t^{1/2} \qquad x \propto t^{3/2}$$

4. Official Ans. by NTA (10)

Sol. Using work energy theorem,

$W_g = \Delta K.E.$

$$(10)\,(g)\,(5) = \frac{1}{2}(10)v^2 - 0$$

$v = 10$ m/s

5. Official Ans. by NTA (6)

Sol. Let's say the compression in the spring by : y.

So, by work energy theorem we have

$$\Rightarrow \frac{1}{2}mv^2 = \frac{1}{2}ky^2$$

$$\Rightarrow y = \sqrt{\frac{m}{k}} \cdot v$$

$$\Rightarrow y = \sqrt{\frac{4}{100}} \times 10$$

$\Rightarrow y = 2$m

$\Rightarrow$ final length of spring

$= 8 - 2 = 6$m

6. Official Ans. by NTA (1)

Sol.

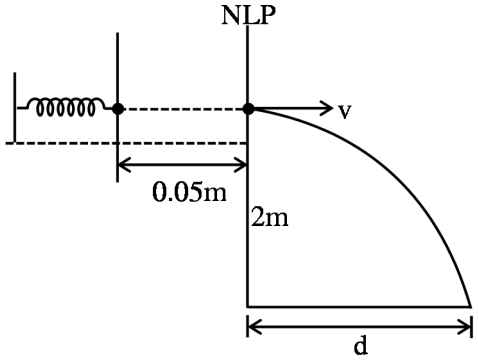

$$\frac{1}{2}kx^2 = \frac{1}{2}mv^2$$

$$Kx^2 = mv^2$$

$$v = x\sqrt{\frac{k}{m}} = 0.05\sqrt{\frac{100}{0.1}} = 0.05\times 10\sqrt{10}$$

$$v = 0.5\sqrt{10}$$

From $h = \frac{1}{2}gt^2$

$$t = \sqrt{\frac{2h}{g}} = \sqrt{\frac{2\times 2}{10}} = \frac{2}{\sqrt{10}}$$

$$\therefore d = vt = 0.5\sqrt{10}\times\frac{2}{\sqrt{10}} = 1m$$

7. Official Ans. by NTA (1)

Sol. $K_2 = 4K_1$

$$\frac{1}{2}mv_2^2 = 4\frac{1}{2}mv_1^2$$

$$v_2 = 2v_1$$

$P = mv$

$P_2 = mv_2 = 2mv_1$

$P_1 = mv_1$

% change

$$= \frac{\Delta P}{P_1}\times 100 = \frac{2mv_1 - mv_1}{mv_1}\times 100 = 100\%$$

8. Official Ans. by NTA (1)

Sol. P = constant

$$\frac{1}{2}mv^2 = Pt$$

$$\Rightarrow v \propto \sqrt{t}$$

$$\frac{dx}{dt} = C\sqrt{t} \qquad C = \text{constant}$$

by integration.

$$x = C\frac{t^{\frac{1}{2}+1}}{\frac{1}{2}+1}$$

$$x \propto t^{3/2}$$

9. Official Ans. by NTA (2)

Sol. $W_{Porter} + W_{mg} = \Delta K.E. = 0$

$W_{Porter} = -W_{mg} = -mgh$

$= -80 \times 9.8 \times .8 = -627.2$ J

10. Official Ans. by NTA (2)

Sol.

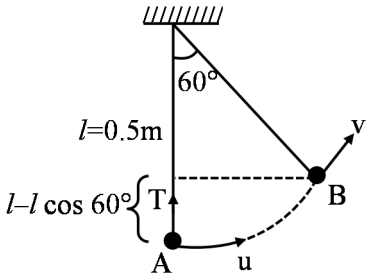

Applying work energy theorem :

$w_g + w_T = \Delta K$

$$-mgl(1-\cos 60^\circ) = \frac{1}{2}mv^2 - \frac{1}{2}mu^2$$

$$v^2 = u^2 - 2gl(1-\cos 60^\circ)$$

$$v^2 = 9 - 2\times 10\times 0.5\left(\frac{1}{2}\right)$$

$v^2 = 4$

$v = 2$ m/s

11. Official Ans. by NTA (450)

Sol. $F = (5y+20)\hat{j}$

$$\omega = \int F dy = \int_0^{10}(5y+20)dy$$

$$= \left(\frac{5y^2}{2} + 20y\right)_0^{10}$$

$$= \frac{5}{2}\times 100 + 20\times 10$$

$= 250 + 200 = 450$ J

12. Official Ans. by NTA (2)

Sol. $E_{mech.} = 8J$

(A) at $x > x_4$, $U = \text{constant} = 6J$

$K = E_{mech.} - U = 2J = \text{constant}$

(B) at $x < x_1$, $U = \text{constant} = 8J$

$K = E_{mech.} - U = 8 - 8 = 0$ J

Particle is at rest.

(C) At $x = x_2$, $U = 0 \Rightarrow E_{mech.} = K = 8$ J

KE is greatest, and particle is moving at fastest speed.

(D) At $x = x_3$, $U = 4$ J

$U + K = 8$ J

$K = 4$ J

node06\B0BA-BB\Kota\JEE MAIN\Jee Main-2021_Subject Topic PDF With Solution\Physics\English\ Work Power Energy

13. Official Ans. by NTA (4)

Sol. P = const.

$$P = Fv = \frac{mv^2dv}{dx}$$

$$\int_0^x \frac{P}{m}dx = \int_0^v v^2dv \quad ; \quad \frac{Px}{m} = \frac{v^3}{3}$$

$$\left(\frac{3Px}{m}\right)^{1/3} = v = \frac{dx}{dt}$$

$$\left(\frac{3P}{m}\right)^{1/3}\int_0^t dt = \int_0^x x^{-1/3}dx \Rightarrow x = \left(\frac{8P}{9m}\right)^{1/2} t^{3/2}$$

14. Official Ans. by NTA (2)

Sol. Given, m = 0.5 kg and u = 20 m/s

Initial kinetic energy $(k_i) = \frac{1}{2}mu^2$

$$= \frac{1}{2} \times 0.5 \times 20 \times 20 = 100 \text{ J}$$

After deflection it moves with 5% of k_i

$$\therefore k_f = \frac{5}{100} \times k_i \Rightarrow \frac{5}{100} \times 100 \Rightarrow k_f = 5 \text{ J}$$

Now, let the final speed be 'v' m/s, then :

$$k_f = 5 = \frac{1}{2}mv^2$$

$$\Rightarrow v^2 = 20 \Rightarrow v = \sqrt{20} = 4.47 \text{ m/s}$$

15. Official Ans. by NTA (2)

Sol.

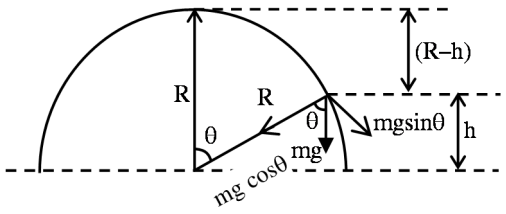

$$mg\cos\theta = \frac{mv^2}{R} \qquad ....(1)$$

$$\cos\theta = \frac{h}{R}$$

Energy conservation

$$mg\{R-h\} = \frac{1}{2}mv^2 \qquad ....(2)$$

$$\text{from (1) \& (2)} \Rightarrow mg\left\{\frac{h}{R}\right\} = \frac{2mg\{R-h\}}{R}$$

$$h = \frac{2R}{3} = 2\text{m}$$

16. Official Ans. by NTA (40)

Sol.

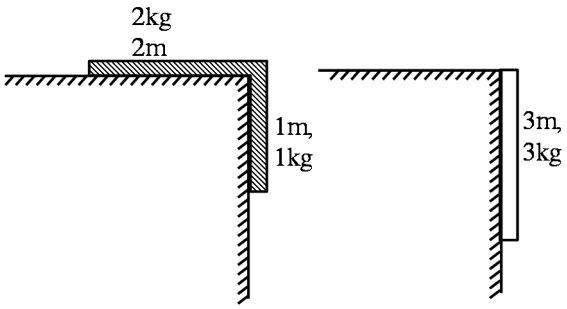

From energy conservation

$K_i + U_i = k_f + U_f$

$$0 + \left(-1 \times 10 \times \frac{1}{2}\right) = k_f + \left(-3 \times 10 \times \frac{3}{2}\right)$$

$–5 = k_f – 45$; $k_f = 40$ J

Ans. 40.00

17. Official Ans. by NTA (2)

Sol. Given $W_A = W_B$

$F_A d\cos 45° = F_B d\cos 60°$

$$F_A \times \frac{1}{\sqrt{2}} = F_B \times \frac{1}{2}$$

$$\frac{F_A}{F_B} = \frac{\sqrt{2}}{2} = \frac{1}{\sqrt{2}}$$

$\boxed{x = 2}$

18. Official Ans. by NTA (1)

Sol. Work done = Change in kinetic energy

$$W_{mg} + W_{\text{air-friction}} = \frac{1}{2}m\left(.8\sqrt{gh}\right)^2 - \frac{1}{2}m(0)^2$$

$$W_{\text{air – friction}} = \frac{.64}{2}mgh - mgh = –0.68mgh$$

Option (1)

19. Official Ans. by NTA (16)

Sol. Work = ΔK.E.

$$W_{\text{friction}} + W_{\text{spring}} = 0 - \frac{1}{2}mv^2$$

$$-\frac{90}{100}\left(\frac{1}{2}mv^2\right) + W_{\text{Spring}} = -\frac{1}{2}mv^2$$

$$W_{\text{spring}} = -\frac{10}{100} \times \frac{1}{2}mv^2 \quad ; \quad -\frac{1}{2}kx^2 = -\frac{1}{20}mv^2$$

$$\Rightarrow k = \frac{40000 \times (20)^2}{10 \times (1)^2} = 16 \times 10^5$$

node06\B0BA-BB\Kota\JEE MAIN\Jee Main-2021_Subject Topic PDF With Solution\Physics\English\ Work Power Energy